J. Appl. Res. Ind. Eng. Vol. 4, No. 1 (2017) 8–23

Journal of Applied Research on Industrial Engineering
www.journal-aprie.com

An Integrated Fuzzy AHP and Fuzzy TOPSIS Approach for Ranking and Selecting the Chief Inspectors Of Bank: A Case Study

Ayda Esmaili-Dooki[1,*] , Prisa Bolhasani[2], Mohammad Fallah[2]

[1]*Department of Industrial Engineering, Firoozkooh branch, Islamic Azad University, Iran*
[2] *Department of Industrial Engineering, Tehran Markaz branch, Islamic Azad university, Iran*
(parisa.4683@gmail.com, mohammad.fallah43@yahoo.com)

PAPER INFO

Chronicle:
Received: 01 May 2017
Revised: 07 June 2017
Accepted: 10 July 2017
Available: 10 July 2017

Keywords :
Ranking and Selecting.
Fuzzy AHP.
Fuzzy TOPSIS.
Bank chief inspectors.

ABSTRACT

Nowadays selecting the best inspectors has triggered a substantially significant issue among today's competitive environment, in particular some prominent banks. It's because the efficient supervision of banking activities is necessary for both achieving a powerful economic environment and financial stability of the country, chief inspectors as highest position of the banks play an important role. Additionally, the bank inspectors are in charge of supervising bank activities to ensure that there is sufficient capital and reserves to deal with risks when they encounter to critical situations. On the other hand, although the banking supervision costs is really high, but the poor monitoring can bring about higher costs. So, this paper presents a hybrid method of fuzzy AHP and fuzzy TOPSIS to select the best chief inspector of banks based on some various qualitative and quantitative criteria with different priorities. The Fuzzy AHP and TOPSIS methods are used to determine the weight importance of criteria and ranking the selected inspectors, respectively. The proposed method was applied to a real case study on one of the most prominent banks of Iran country and the obtained results show that our proposed method is so practical to make the best decision of selecting the bank chief inspectors.

1. Introduction

In today's competitive environment, selecting a qualified individual for a specific post in particular the top level posts ensure the success of an organization. The term 'qualified' refers to academic and non-academic qualifications, human behaviors, related knowledge, psychological features and so on. The focal factor is that, most of the time selecting human resource process consists of testing or interviewing done according to human's judgments. The weakness point of this approach is that, although more experienced managers are reluctant to being biased, in most cases human's opinions are based on their bias [1]. Therefore, the personal selection problem is the critical research topic in which the researchers take into meticulous consideration to produce the best decision which is close to

* Corresponding author
E-mail address: esmaili.ayda@yahoo.com
DOI: 10.22105/jarie.2017.48258

the actual results. To provide prioritizing of available alternatives, seemingly Multi Attribute Decision Making (MADM) techniques facilitate the making decisions process.

The Fuzzy AHP (FAHP) is one of the most prominent MCDM method for personnel selection in which some produced criteria are weighted based on their importance and the candidates are evaluating according to them.

Eventually, the final score would be determined who is the most qualified candidate. Another popular method is FTOPSIS used to improve the gaps between the alternative performance and the actual results and also finding the best alternative who is desired for the post based on the important criteria.

In this paper we propose a hybrid fuzzy AHP-TOPSIS method for selecting and ranking the qualified chief inspectors of bank based on the best performance. For the first time, we take the bank inspectors of Iran country as the real case study. Forty experts are selected to evaluate the performance of 25 candidates and then determining the preference weights of this evaluation is done by fuzzy AHP method. Meanwhile, a four level AHP model is considered to select the bank chief inspector which is shown by Fig 1. In addition, 5 criteria and 20 vital sub criteria are considered to choose the best individual for inspection post and they are illustrated in Fig 1.

Eventually, fuzzy TOPSIS technique is used to find out the best prioritize of the qualified bank chief inspectors. These methods are used based on fuzzy view because the fuzzy set theory is a great tool to tackle with the imprecision, randomness and ambiguity of the personnel selection problem [2, 3]. Based on our best knowledge and according to Table.1 that shows a summary of studies in personnel selecting problems, hitherto there is no investigations associated with selecting the bank chief Inspectors whereas they have key role in maintaining the economic cycle.

The remainder of the paper is expressed as follows: In Section 2 a brief literature review related to the problem is presented. A hybrid fuzzy AHP and fuzzy TOPSIS is proposed in Section 3. The next section devoted to the implementation of the proposed method in the real case study. Finally, some concluding remarks and offers for future research are given in the last section.

2. Literature review

One of the most interesting topic which is attracted researchers' attention is associated with the personnel selection as a MCDM problem [4-7]. Various techniques are available to solve MCDM problems, such as AHP, TOPSIS, ELECTRE, rough sets theory and Multi-objective programming [8]. In comparison with other MCDM methods, AHP technique widely used in MCDM and other problems successfully [5, 9]. AHP method has emerged as a useful decision making technique for solving and analyzing the complex problems. Indeed, the AHP converts a complex problem to several simple problems and solve them [10].

Chen and Cheng [5] proposed a new approach for ranking numbers by utilizing metric distance so that this computer based group decision support system consist three ranking methods: intuition ranking, Lee and Li's fuzzy mean/spread and our metric distance method. The propose of their study was helping the manager to make the better decision when they

have to cope with fuzzy conditions and the obtained results embody that their proposed approach is coincident with intuition ranking and the Lee and Li's fuzzy mean/spread method on each type weight [5]. Also, in other study, MClntyre et al. [9] shows that how it is possible to integrate AHP method and Expert choice software into an overall decision making process. They have investigated a case study of the construction Management and making process. They have investigated a case study of the construction management and engineering division, within the department of civil engineering and construction at North Dakota State University to choose a new director by utilizing AHP and Expert choice software [9]. However, it is because the expert's opinions are based on the subjective judgments or imprecise value AHP method is not able to deal with imprecise decision problems and it criticized by some researchers [10, 11, 12].

The other MCDM method is TOPSIS which selects the best alternative based on the distance from ideal solution. Roudi and Jafar Abadi [13] proposed a new model to choose the qualified personnel of active information technology companies by utilizing Meta-synthesis method and TOPSIS method for prioritizing the alternatives and identifying the effective criteria, respectively. For this purpose, 33 people of a case study that are qualified enough for three jobs: information technology manager, information systems analysts and computer programmer are considered as alternatives by them to compare the obtained results with the results of traditional method. They concluded that despite some conflicts the proposed model is adapted to the traditional approach. In other study, Bhutia [14] proposed a developed framework of AHP and TOPSIS method to select the suitable supplier to achieve the effective supply chain. At first, the weight of each criterion was calculated by utilizing AHP method and after that the suppliers were ranked by using TOPSIS approach. Despite the advantages of TOPISIS method, it is not practical in an uncertain environment because of Nondeterministic preferences, inadequate knowledge, poor, inappropriate and inaccessible information of decision maker [15].

Shirouyehzad et al. [16] try to prioritize preeminent manufacturing brands of Isfahan province due to 12 critical success factors of knowledge management. They have gathered the required data by designing some questionnaire and then the data were analyzed and prioritized using fuzzy TOPSIS technique due to the critical factors of organization. According to the obtained results they concluded that Iran smelting company and Pars electric company were placed in the first and second place based on the associated similarity index, respectively. In other study, Ravasan et al. [17] proposed a model with an application of fuzzy TOPSIS to rank and prioritize the alternatives in selecting the appropriate IT outsourcing (ITO) strategy problem due to the influencing factors. For this purpose, they used the data from a real banking case to run the model for supporting outsourcing decision for five ATM, POS, tele-banking, mobile, and internet-banking services. The results show that their proposed model can help ITO decision makers advance their decision making process, especially when the parameters involve uncertainties and hardly can be assessed by human judgment.

Therefore, to the above mentioned combining AHP and TOPSIS method in fuzzy environment seems a best way to gain the benefits of these methods and also to deal with the uncertainty and ambiguity of evaluations [8, 12, 18-28]. Therefore, this paper applied an

integrated Fuzzy AHP and Fuzzy TOPSIS approach to the case of bank chief inspector selection for the first time that is not investigated so far due to the literature. Besides, Table 1. Illustrates the summary of studies in personal selecting problems that are investigated by us and it embodies that both case study and considered criteria proposed in the present study are completely new.

3. Definition of concepts

3.1. Fuzzy set theory

It is very difficult to make decisions in a vague and uncertain environment. For one, sometimes evaluations done by experts based on their experiences are proposed by linguistic variables. To tackle these vagueness and uncertainty, fuzzy theory proposed by Zadeh [29] can be applied. A fuzzy set is made up of membership functions that embodies the degrees of membership with real numbers is [0, 1] interval. If the element has no membership and total membership, the value would be zero and one, respectively, otherwise, if the value is a number between zero and one, it means that the element has a certain degree of membership. On the other hand, converting the linguistic terms into fuzzy numbers seems a great way to overcome the vagueness and ambiguities. There are various types of fuzzy number shapes and the triangular fuzzy number is the most popular one which is defined as (a, b, c) in which a, b and c are the lowest possible value, the most favorable value, and the highest possible value, respectively. The membership function for a triangular fuzzy number $\tilde{A}$ can be denoted as Eq.1 and Fig 2:

$$\mu_{\tilde{A}(x)} = \begin{cases} 0 & x < a \\ \frac{x-a}{b-a} & a \le x \le b \\ \frac{c-x}{c-b} & b \le x \le c \\ 0 & x \ge c \end{cases} \tag{1}$$

Some operational rules such as summation, multiplication, reverse and the distance between two TFN, $\tilde{A}=(a_1, a_2, a_3)$, and $\tilde{B} = (b_1, b_2, b_3)$, are stated as Eq.2 to Eq.5 [30]:

$$\tilde{A} \oplus \tilde{B} = (a_1, a_2, a_3) \oplus (b_1, b_2, b_3) = (a_1 + b_1, a_2 + b_2, a_3 + b_3) \tag{2}$$

$$\tilde{A} \otimes \tilde{B} = (a_1, a_2, a_3) \otimes (b_1, b_2, b_3) = (a_1 b_1, a_2 b_2, a_3 b_3) \tag{3}$$

$$\tilde{A}^{-1} = \left(\frac{1}{a_1}, \frac{1}{a_2}, \frac{1}{a_3}\right) \tag{4}$$

$$D(\tilde{A}, \tilde{B}) = \sqrt{\frac{1}{3}\left[(a_1 - b_1)^2 + ((a_2 - b_2)^2) + ((a_3 - b_3)^2)\right]} \tag{5}$$

3.2. Fuzzy AHP

AHP method is a quantitative technique used for multi criteria decision making and introduced by Satty [31] for the first time [32]. The pivoted point is that there are some limitations in utilizing this method like easing of use in crisp decision application, dealing with very unbalanced judgmental scales, being unable to tackle with uncertainty and ambiguity of one's judgment and the subjective selection and ranking. Then, it is necessary

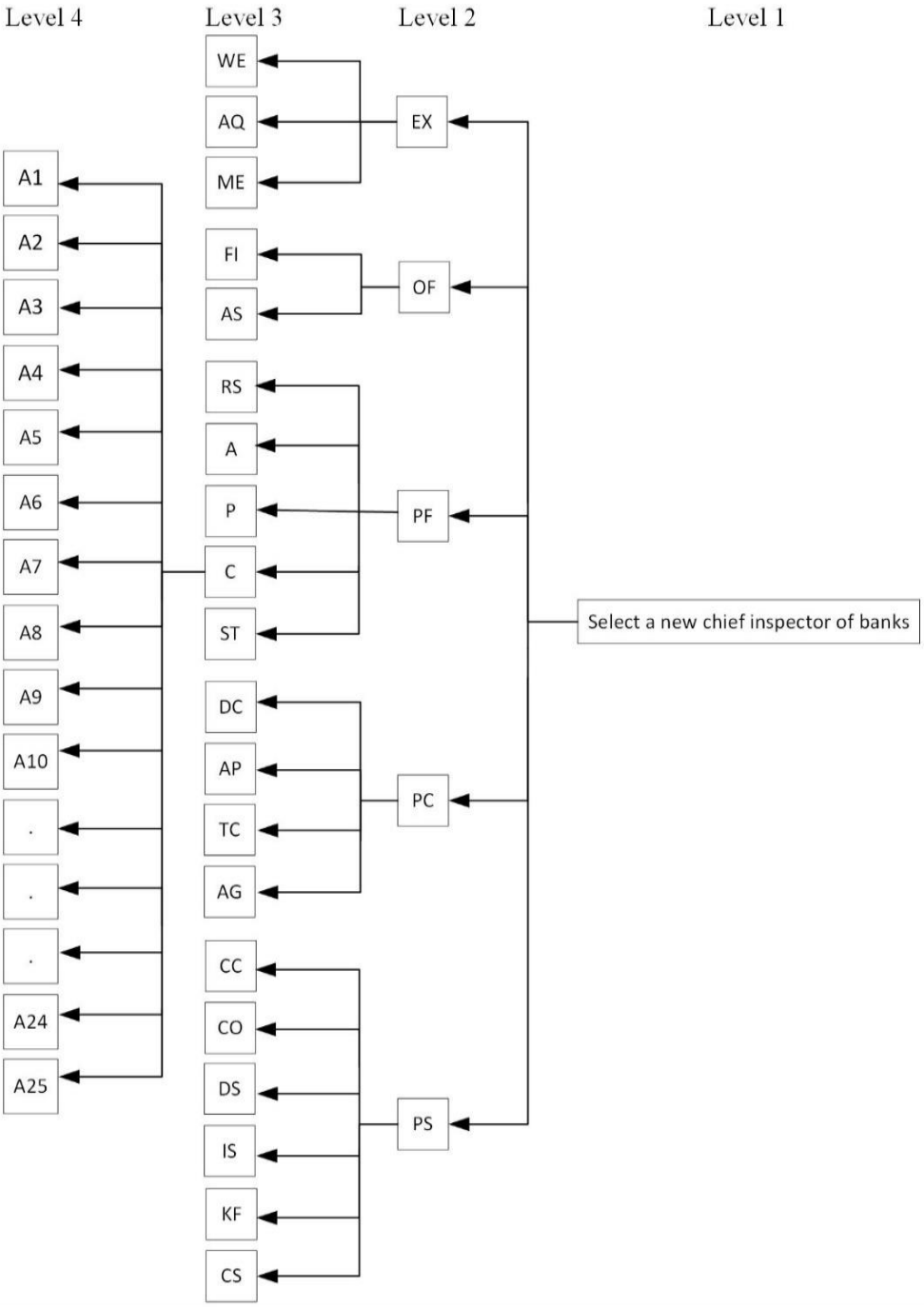

EX: Experience	A: Attitude	PS: Personal and Professional Skills
WE: Work Experience	P: Personality	CC: Capacity and Capability
AQ: Academic Qualifications	C: Confidence	CO: Communication Skills
ME: Managerial Experience	ST: Strategic Thinking	DS: Decision-making Skills
OF: Objective Factors	PC: Personal Characteristics	IS: Inspection Skills
FI: Face to Face Interview Score	DC: Diction	KF: knowledge of Foreign Language
AS: Assessment Score	AP: Appearance	CS: Computer Skills
PF: Psychological Features	TC: Being on Time/Consistent	
RS: Respecting to Subordinates	AG: Age	

Fig 1. AHP model for selecting the bank chief inspector

Table 1. Summary of studies in personnel selecting problems

References	Method	objective	Criteria
Bhutia [14]	AHP-TOPSIS	Supplier selection	Product quality, service quality, delivery time and price.
Malik [38]	Fuzzy AHP-TOPSIS	Personnel Prioritization	Objective criteria and subjective criteria.
Kusumawardani et al. [23]	Fuzzy AHP-TOPSIS	Human resource selection.	Assessment center Score, level of education, major at school/university, stream match, length of time on stream, talent cluster index, performance index, competence index, length of time on position band and disciplinary sanction.
Varthanan, et al. [32]	Fuzzy AHP-TOPSIS	Personnel recruitment selection	Diction, physical appearance, academic efficiency, work experience and extroversion.
Soleimani, et al. [39]	Fuzzy AHP	Selecting the managers of industry organizations	Capacity and capability, Communication skills, Decision-making skills, Management skills, Personal and professional skills.
Norddin, et al. [40]	AHP	Selecting New Lecturers	Mock teaching performance and face to face interview and academic qualification.
Shaker Ardakani, et al. [41]	Fuzzy AHP-TOPSIS	Personnel selection	Personal characteristics, managerial skills, knowledge and abilities and the vision.
Torfi, et.al. [12]	Fuzzy AHP-TOPSIS	Select mobile phone	Two criteria and 5 sub criteria.
Kelemenis, and Askounis [15]	Fuzzy TOPSIS	IT professional selection	Technical skills
Sun [22]	Fuzzy AHP-TOPSIS	Performance evaluation	Manufacturing capability, supply chain capability, innovation capability, financial capability, human resource capability and service quality capability.
Celik, et al. [19]	Integration of AHP-TOPSIS and SWOT	The academic personnel selection	Personality measures, Capability of MS Office programs, Emotional stability, Conscientiousness ,Capability of advance computer programs, listening, reading, writing, …
Saremi, et al. [6]	Fuzzy AHP-TOPSIS	Selecting external consultant	Knowledge of business, relevant experience, Technical skills, Management skills and Implementation cost.
Seol, and Sarkis [4]	AHP method	Select and evaluate internal auditors	Technical skills, Design problem structuring and solving skills, appreciative skills judgment, personal skills, interpersonal skills and organizational skills.
Chen, and Cheng [5]	The FMCGDSS three ranking methods	Information system manager selection	Analysis and design, programming, Interpersonal, business, environment and application.
Present study	Fuzzy AHP-TOPSIS	Selecting and prioritizing the bank chief inspectors	Experience (work experience, academic qualifications, managerial experience), Objective factors(the face to face interview score, assessment score), psychological features (respecting to subordinates, attitude, personality, confidence, strategic thinking), personal characteristics(diction, appearance, being on time/hardworking/consistent, age), personal and professional skills(capacity and capability, communication skills, decision making skills, inspection skills, knowledge of foreign language, computer skills).

to combine a AHP technique with fuzzy set theory to deal with an imprecise environment like expert's judgments proposed by linguistic variables. For the first time being, Fuzzy AHP methodology attracted many researchers' attention and it is widely used to solve multi criteria decision problems [33]. The proposed procedure by Chang [34] is applied in many studies [35] and its steps are explained as follow:

Step 1. Convert fuzzy linguistic terms used by experts to crisp one

In this method, the fuzzy linguistic terms utilized by decision makers (experts) should translate to crisp one according to the range of value illustrated in Table 2 [36]. Then, the comparison matrix will be as follows:

$$\tilde{A} = \begin{bmatrix} 1 & \tilde{a}_{12} & \dots & \tilde{a}_{1n} \\ \tilde{a}_{21} & 1 & \dots & \tilde{a}_{2n} \\ . & . & . & . \\ . & . & . & . \\ . & . & . & . \\ \tilde{a}_{21} & \tilde{a}_{21} & \dots & 1 \end{bmatrix} \tag{6}$$

Step 2. Calculating the fuzzy synthetic extent value (S_i)

Assume that l_i , m_i and u_i are the lower limit, the most promising and the upper limit value of the criteria i, respectively. The fuzzy synthetic extent value can be defined as follows:

$$S_i = \sum_{j=1}^{n} M_{gi}^{j} \otimes \left[\sum_{i=1}^{m}\sum_{j=1}^{n} M_{gi}^{j}\right]^{-1} \tag{7}$$

$$\sum_{j=1}^{n} M_{gi}^{j} = \left(\sum_{j=1}^{n} l_j , \sum_{j=1}^{n} m_j , \sum_{j=1}^{n} u_j\right) \tag{8}$$

$$\left[\sum_{i=1}^{m}\sum_{j=1}^{n} M_{gi}^{j}\right]^{-1} = \left(\frac{1}{\sum_{i=1}^{n} u_i}, \frac{1}{\sum_{i=1}^{n} m_i}, \frac{1}{\sum_{i=1}^{n} l_i}\right) \tag{9}$$

Step 3. The degree of possibility for two TFN

The degree of possibility for two triangular fuzzy number, M_1= (l_1, m_1, u_1) and M_2= (l_2, m_2, u_2) can be defined by Eq.10 (see Fig 3):

Table 2. Linguistic scales for importance used in comparison matrix

Degree of importance	Linguistic variables	Positive TFN
$\tilde{1}$	Equal or not important(E)	(1,1,1)
$\tilde{3}$	Weak important(WI)	(1,3,5)
$\tilde{5}$	Moderate important(MI)	(3,5,7)
$\tilde{7}$	Strong important(SI)	(5,7,9)
$\tilde{9}$	Extreme important(EI)	(7,9,9)

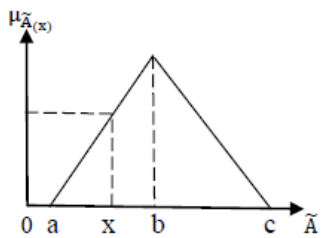

Fig 2. Membership function of fuzzy triangular number (TFN).

$$(M_2 \geq M_1) = hgt(M_1 \cap M_2) = \begin{cases} 1 & m_1 < m_2 \\ 0 & l_1 \geq u_2 \\ \dfrac{u_1 - l_2}{(u_1 - l_2) - (m_1 - l_1)} & O.W \end{cases} \quad (10)$$

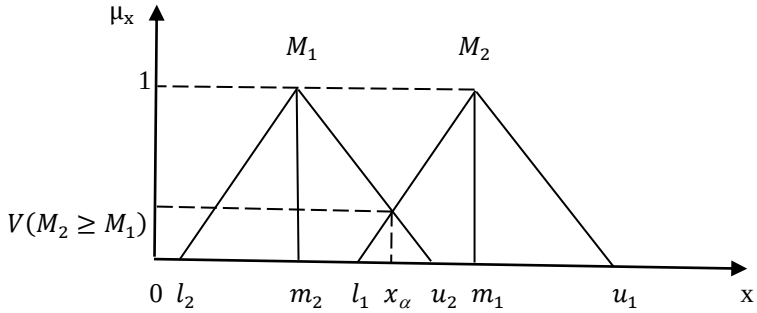

Fig 3. The Possibility degree of two

Step 4. The degree of possibility for a convex fuzzy number and k convex fuzzy number

The possibility degree of a convex fuzzy number when it is greater than k convex fuzzy number can be calculated by:

$$V(M \geq M_1, M_2, \dots, M_k) = V\big((M \geq M_1), (M \geq M_2), \dots, (M \geq M_k)\big) = Min\{V(M \geq M_i)\} \quad i = 1, 2, \dots, k \quad (11)$$

Step 5. Check consistency

To compute the consistency and inconsistency ratio, at first we should calculate the largest Eigen values as follows:

$$\lambda_i = \frac{Aw}{w_i} \qquad i = 1,2,\dots,m \quad (12)$$

Then the inconsistency ratio (I.I) for the hierarchy can be determined by Eq. 13:

$$\mathrm{I.I} = \frac{\lambda_{max} - n}{n-1} \quad (13)$$

The consistency ratio shows that the fuzzy comparison matrix is consistent and it can be calculated by utilizing Eq. 14:

$$\mathrm{I.R} = \frac{\overline{\mathrm{I.I}}}{\overline{\mathrm{R.I.I}}} \quad (14)$$

Where I.R and $\overline{\mathrm{R.I.I}}$ represents the consistency index and random index (see Table 4), respectively.

Step 6. Determine the normalized weight of criteria

To compute the weight of criteria associated with comparison matrix the following equation should be utilized:

$$d'(A_i) = Min\{V(S_i \geq S_k)\}, \qquad k = 1,2,\dots,n \quad , \quad k \neq i \quad (15)$$

Then the normalized vector weight can be as follows:

$$W' = [W'(c_1),\ W'(c_2), \dots, W'(c_n)]^T \quad (16)$$

3.3. Fuzzy TOPSIS

TOPSIS is a MCDM method developed by Hwang and Yoon [36]. This method is based on two concepts: positive and negative ideal solution (PIS and NIS). It means that the selective attribute should have the shortest and farthest distance from PIS and NIS, respectively. In the traditional TOPSIS method, individual preferences are represented with crisp values, whereas in the real life problems, the uncertainty and impreciseness should be considered. Therefore, fuzzy TOPSIS is a practical tool for cope with a wide variety of studies which have been studied in literature [37]. Fuzzy TOPSIS method consists of following steps:

Step 1. Assigning linguistic variables to alternatives

This step is associated with assigning the linguistic variables for the alternatives due to the criteria which is given in Table 3 and construct fuzzy matrix of alternatives like Eq. 17.

$$\tilde{X} = \begin{bmatrix} x_{11} & x_{12} & \dots & x_{1n} \\ x_{21} & x_{22} & \dots & x_{2n} \\ . & . & . & . \\ . & . & . & . \\ . & . & . & . \\ x_{m1} & x_{m2} & \dots & x_{mn} \end{bmatrix} \tag{17}$$

Step 2. Construct the normalized matrix

For getting comparable scale, a linear scale transformation is used for positive and negative indicators, respectively:

$$\tilde{R}=[\tilde{r}_{ij}]_{m\times n} \tag{18}$$

$$\tilde{r}_{ij} = \left(\frac{a_{ij}}{c_j^*}, \frac{b_{ij}}{c_j^*}, \frac{c_{ij}}{c_j^*}\right) \quad , c_j^* = \max c_{ij} \qquad i = 1,2,\dots,m, \quad j = 1,2,\dots,n \tag{19}$$

$$\tilde{r}_{ij} = \left(\frac{a_j^-}{c_{ij}}, \frac{a_j^-}{b_{ij}}, \frac{a_j^-}{a_{ij}}\right) \quad , a_j^- = \min a_{ij} \qquad i = 1,2,\dots,m, \quad j = 1,2,\dots,n \tag{20}$$

Table 3. Linguistic variables for alternatives

Linguistic variables	Fuzzy ranks
Very poor(VP)	(0,1,1)
poor(P)	(0,1,3)
Medium poor(MP)	(1,3,5)
Fair(F)	(3,5,7)
Medium good(MG)	(5,7,9)
good(G)	(7,9,10)
Very good(VG)	(9,9,10)

Step 3. Construct the weighted normalized matrix

Supposed that $\widetilde{W}_j$=$(\widetilde{w}_1, \widetilde{w}_2, \dots, \widetilde{w}_n)$ is the weight importance of decision maker and $\sum_{j=1}^{n} \widetilde{W}_j = 1$. $\tilde{V}$=$\left[\tilde{v}_{ij}\right]_{m\times n}$is the weighted normalized matrix where $i = 1,2, \dots, m$ and $= 1,2, \dots, n$ and it can be computed by utilizing given Eq. 21:

$$\tilde{v}_{ij} = \tilde{r}_{ij} * \widetilde{W}_j \tag{21}$$

Step 4. Calculate the fuzzy positive (FIPS) and fuzzy negative ideal solution (FNIS)

The FPIS and FNIS for alternatives can be determined as follow, respectively:

$$A^* = (\tilde{v}_1^*, \tilde{v}_2^*, \dots, \tilde{v}_3^*) \qquad j = 1,2, \dots, n \tag{22}$$
$$A^- = (\tilde{v}_1^-, \tilde{v}_2^-, \dots, \tilde{v}_3^-) \qquad j = 1,2, \dots, n \tag{23}$$

Step 5. Calculating the distance of each choice from FPIS (A^*) and FNIS(A^-)

Calculating the distance of each weighted alternatives from FPIS and FNIS is possible by following equations:

$$S_i^* = \sum_{j=1}^{n} d(\tilde{v}_{ij}, \tilde{v}_j^*) \qquad i = 1,2, \dots, m \tag{24}$$
$$S_i^- = \sum_{j=1}^{n} d(\tilde{v}_{ij}, \tilde{v}_j^-) \qquad i = 1,2, \dots, m \tag{25}$$

Step 6. Calculating each alternative closeness coefficient (CC_i^*)

Closeness Coefficient (CC_i^*) represents the similarity to ideal solution and it can be determined as follows:

$$CC_i^* = \left(\frac{S_i^-}{S_i^* + S_i^-}\right) \qquad i = 1,2, \dots, m \tag{26}$$

Step 7. Ranking the alternatives

Ranking the different alternatives by utilizing CC_i^*on a decreasing order.

3.4. Hybrid fuzzy AHP/TOPSIS approach

In this section, the proposed two-phased approach is for selecting and ranking the bank inspectors. It's because the impreciseness and uncertainty can be managed by fuzzy framework, we used an integrated approach of Fuzzy Analytical Hierarchical Process (FAHP) and fuzzy Technique for Order of Preference by similarity to Ideal Solution (FTOPSIS). At first, FAHP is used to compute the weights of criteria for chief inspectors' evolution. Then, the FTOPSIS method is applied to prioritize the optimal alternatives according to the mentioned criteria. Fig 4. Shows a diagram of our proposed research methodology.

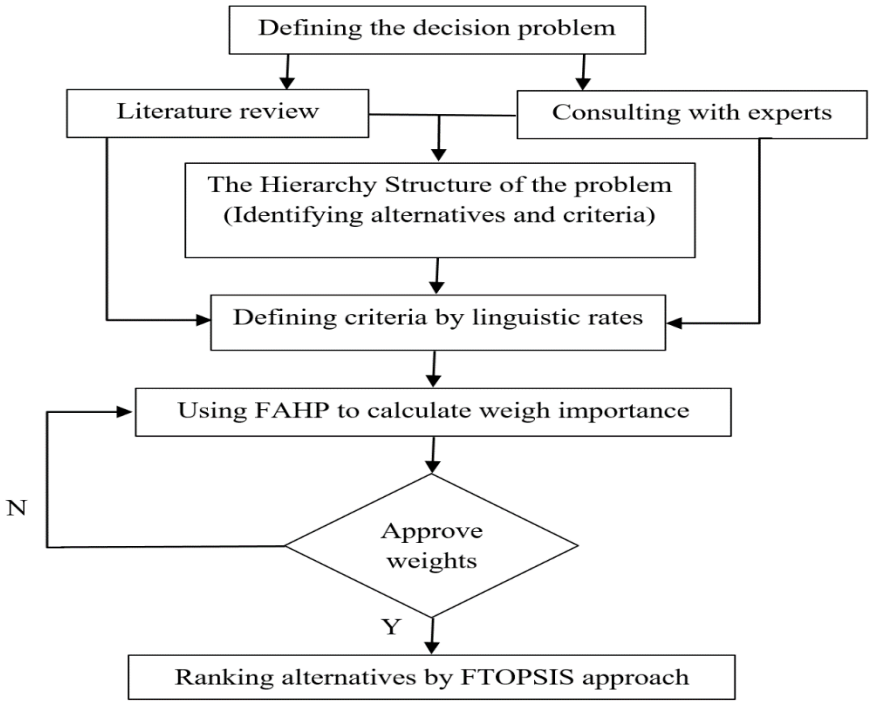

Fig 4. Proposed hybrid approach framework

4. Priorities of the bank chief inspectors by the topic approach

The two phased-proposed framework mentioned above can be utilized for selecting and ranking the best chief inspectors of bank, as follows:

The selection problem of chief inspector for banks should be done in an uncertain environment. On the other hand, since many influential indicators are qualitative and proposed based on experts' judgments by linguistic variables, some classical certain methods of multi criteria decision making seem unpractical. Then it is the best stimulus to propose a hybrid fuzzy method to overcome the classical methods problems. This can be done by implementing the Fuzzy AHP and TOPSIS methods to determine the weight importance of criteria for selecting the qualified inspectors and ranking the selected inspectors, respectively.

One of the famous bank namely S.B investigated as a case study in the Iran country for the first time to illustrate the usability of the proposed method. S.B is one of the most prominent bank in Iran country. That's why it plays an important role in maintaining the country economic cycle. In this study, at first the bank chief inspectors are evaluated through a hybrid Fuzzy AHP method to determine the preference weights of each criteria and then Fuzzy TOPSIS technique is used to find out the best prioritize of the qualified bank chief inspectors.

The first step is associated with the DMs consist of 40 experts who were the member of inspection committee and also they are specialized enough to filled out the questionnaires for proposing their opinions based on Table 5. As mentioned in the previous section, the AHP method firstly needs the pair-wise comparison matrix of the criteria and sub-criteria to determine the weight of criteria. In this study, 5 criteria and 20 sub-criteria were selected as

the most important and influential criteria for choosing the chief inspectors that shown in Fig.1. This four level hierarchical structure of the decision model shows the objective of the problem, the important criteria, the vital sub-criteria and the alternatives, respectively.

The comparison matrix of criteria and the normalized fuzzy criteria aggregated weight of criteria according to experts' opinion is established in Table 4 and 5. In addition the consistency of the comparison matrix were checked by contributing Eq. 12 to 14 and Expert choice software. The obtained results show that the comparison matrix is consistence (I.R <0.1).

Table 4. The Comparison matrix of criteria

criteria	C_1	C_2	C_3	C_4	C_5
C_1	(1,1,1)	(7,9,9)	(5,7,9)	(5,7,9)	(3,5,7)
C_2	(1/9,1/9,1/7)	(1,1,1)	(1,1,3)	(1,3,5)	(1,3,5)
C_3	(1/9,1/7,1/5)	(1/3,1,1)	(1,1,1)	(1,3,5)	(3,5,7)
C_4	(1/9,1/7,1/5)	(1/5,1/3,1)	(1/5,1/3,1)	(1,1,1)	(3,5,7)
C_5	(1/7,1/5,1/3)	(1/5,1/3,1)	(1/7,1/5,1/3)	(1/7,1/5,1/3)	(1,1,1)

Table 5. The normalized fuzzy criteria aggregated weight of criteria

criteria	C_1	C_2	C_3	C_4	C_5
W	0.52	0.13	0.14	0.153	0.05

In present study, the positive triangular fuzzy numbers were employed as linguistic variables to evaluate and prioritize the alternatives according to the obtained weights of each criterion. Indeed, the purpose of this step is assigning the linguistic variables for the alternatives due to the criteria and then transforming these values to crisp one based on Table 2. As one, the membership function (3,5,7) is a set of positive fuzzy triangular numbers which represents a decision of Fair(F) for criteria 1(C_1) by expert 1. So, the linguistic variables of alternative's criteria and the aggregated fuzzy numbers due to DMs' opinion which is illustrates the original assessment information shown in Table 6 and 7, respectively. Also, Table 8 declares the distance of each alternative from fuzzy positive ideal solution (FPIS) based on Eq. 24. Similarly, the distance of each alternative from fuzzy negative ideal solution (FNIS) can be done by Eq. 25 and Table 9 shows the results.

Table 10 demonstrates the ranking of important criteria according to the aggregated opinion of the individual judgments of experts by utilizing an integrated Fuzzy AHP and Fuzzy TOPSIS method. The table presents the PINS and FNIS values to compare the Closeness Coefficient (CC_i^*) of each alternatives by employing Eq. 26. Therefore, due to CC_i^* amount and Efficiency Rate(ER), alternative 2(A_2) was found the best alternative by the highest amount of CC_i^*=0.2474 and ER =100%. Similarly, for the other alternative the ranking results can be show in Table 10. It is noticeable that the outcomes are the best guidance for the banks experts or even the other companies to select the best alternatives based on the most important criteria.

Table 6. The linguistic variables of alternatives' criteria based on DM's opinion (Expert1)

Alternatives	Criteria				
	C_1	C_2	C_3	C_4	C_5
A_1	F	MG	VG	VG	P
A_2	G	VG	F	MG	G
A_3	VG	P	F	VP	MG
A_4	MG	G	G	MP	VG
A_5	F	G	F	MG	F
…	…	…	…	…	…
A_{24}	VG	MP	G	G	VP
A_{25}	G	F	VP	P	F

Table 7. The aggregated weighted and normalized matrix fuzzy decision matrix of alternatives

Alternatives	Criteria				
	C_1	C_2	C_3	C_4	C_5
A_1	(0.15,0.26,0.36)	(0.06,0.09,0.11)	(0.12,0.13,0.14)	(0.13,0.14,0.15)	(0.00,0.00,0.01)
A_2	(0.36,0.46,0.52)	(0.11,0.12,0.13)	(0.04,0.07,0.09)	(0.70,0.10,0.13)	(0.03,0.04,0.05)
A_3	(0.46,0.49,0.52)	(0,00.010,0.03)	(0.04,0.07,0.09)	(0.00,0.00,0.01)	(0.02,0.03,0.04)
A_4	(0.26,0.36,0.46)	(0.09,0.11,0.13)	(0.09,0.12,0.14)	(0.01,0.04,0.07)	(0.04,0.04,0.05)
A_5	(0.15,0.26,0.36)	(0.09,0.11,0.13)	(0.04,0.07,0.09)	(0.07,0.10,0.13)	(0.01,0.02,0.03)
…	…	…	…	…	…
A_{24}	(0.46,0.49,0.52)	(0.01,0.03,0.06)	(0.09,0.12,0.14)	(0.10,0.13,0.15)	(0.00,00.0,0.00)
A_{25}	(0.36,0.46,0.52)	(0.03,0.06,0.09)	(0.00,0.00,0.01)	(0.00,0.01,0.04)	(0.01,0.02,0.03)

Table 8. The distance between each criteria and FPIS (A^*)

Alternatives	Criteria					
	C_1	C_2	C_3	C_4	C_5	A^*
A_1	0.4687	0.1170	0.1261	0.1377	0.0450	0.8945
A_2	0.4754	0.1233	0.1330	0.1532	0.0500	0.9349
A_3	0.4552	0.1123	0.1492	0.1238	0.0453	0.8858
A_4	0.5234	0.1302	0.1532	0.1265	0.0462	0.9795
A_5	0.4940	0.1275	0.1145	0.1538	0.0502	0.9400
…	…	…	…	…	…	…
A_{24}	0.4765	0.1321	0.1275	0.1408	0.0543	0.9312
A_{25}	0.4637	0.1356	0.1527	0.1573	0.0045	0.9138

Table 9. The distance between each criteria and FNIS (A^-)

Alternatives	Criteria					
	C_1	C_2	C_3	C_4	C_5	A^-
A_1	0.0065	0.0567	0.0598	0.0983	0.0256	0.2469
A_2	0.0827	0.0783	0.0109	0.0576	0.0782	0.3077
A_3	0.0912	0.0261	0.0109	0.0076	0.0654	0.2012
A_4	0.0078	0.0567	0.0309.	0.0267	0.0839	0.1751
A_5	0.0065	0.0567	0.0109	0.0567	0.0453	0.1761
…	…	…	…	…	…	…
A_{24}	0.0912	0.0345	0.0309	0.0762	0.0149	0.2477
A_{25}	0.0827	0.0465	0.0078	0.0192	0.0453	0.2015

Table 10. Importance ranks according to fuzzy AHP-TOPSIS method

Alternatives	A^*	A^-	$A^* + A^-$	CC_i^*	$ER(\%)$	Rank
A_1	0.8945	0.2469	1.1414	0.2163	87.35	3
A_2	0.9349	0.3077	1.2426	0.2476	100.00	1
A_3	0.8858	0.2012	1.0870	0.1850	74.71	9
A_4	0.9795	0.1751	1.1546	0.1516	61.22	15
A_5	0.9400	0.1761	1.1161	0.1577	63.69	14
…	…	…	…	…	…	…
A_{24}	0.9312	0.2477	1.1789	0.2101	84.85	4
A_{25}	0.9138	0.2015	1.1153	0.1806	72.94	10

5. Conclusion and future research

In this paper, we proposed a bank chief inspectors' selection and ranking model based on a hybrid Fuzzy AHP-TOPSIS method for the first time. Firstly, the most influential indicators as selected by Fuzzy AHP technique to select the most qualified chief inspectors of bank. After the Fuzzy TOPISI method were utilized to assist the inspection committee as DMS to prioritize the chief inspectors based on the important criteria. It is worthwhile to say that the implications of proposed model are not restricted to selection the bank chief inspectors and it is practical for different real problems. Then for the future research, the same model can be used for another case studies by considering different criteria. In addition, using other MCDM methods like VIKOR, ELECTRE or the combination of them can be a great suggestion.

References

[1] Marlowe, C. M., Schneider, S. L., & Nelson, C. E. (1996). Gender and attractiveness biases in hiring decisions: Are more experienced managers less biased?. *Journal of applied psychology*, 81(1), 11-21.

[2] Kahraman, C. (2009). Introduction: fuzzy theory and technology. *Multiple-valued logic and soft computing*, 15(2-3), 103-105.

[3] Kaur, P., & Chakrabortyb, S. (2007). A new approach to vendor selection problem with impact factor as an indirect measure of quality. *Journal of Modern mathematics and Statistics*, 1(1), 8-14.

[4] Seol, I., & Sarkis, J. (2005). A multi-attribute model for internal auditor selection. *Managerial Auditing Journal*, 20(8), 876-892.

[5] Chen, L. S., & Cheng, C. H. (2005). Selecting IS personnel use fuzzy GDSS based on metric distance method. *European journal of operational research*, 160(3), 803-820.

[6] Saremi, M., Mousavi, S. F., & Sanayei, A. (2009). TQM consultant selection in SMEs with TOPSIS under fuzzy environment. *Expert Systems with Applications*, 36(2), 2742-2749.

[7] Dağdeviren, M. (2010). A hybrid multi-criteria decision-making model for personnel selection in manufacturing systems. *Journal of Intelligent manufacturing*, 21(4), 451-460.

[8] Choudhary, D., & Shankar, R. (2012). An STEEP-fuzzy AHP-TOPSIS framework for evaluation and selection of thermal power plant location: A case study from India. *Energy*, 42(1), 510-521.

[9] McIntyre, C., Kirschenman, M., & Seltveit, S. (1999). Applying decision support software in selection of division director. *Journal of Management in Engineering*, 15(2), 86-92.

[10] Khoshfetrat, S., & Hosseinzadeh-Lotfi, F. (2014). Deriving priorities, the alternatives in an analytic hierarchy process. *International Journal of Research in Industrial Engineering*, 3(4), 13-20.

[11] Cheng, C. H. (1999). Evaluating weapon systems using ranking fuzzy numbers. *Fuzzy sets and systems*, 107(1), 25-35.

[12] Torfi, F., Farahani, R. Z., & Rezapour, S. (2010). Fuzzy AHP to determine the relative weights of evaluation criteria and Fuzzy TOPSIS to rank the alternatives. *Applied Soft Computing*, 10(2), 520-528.

[13] Roudi, A., & Jafar Abad, A. K. (2015). A staff selection model for active privet companies of information technology. *Information Technology Management*, 7(3), 595-614.

[14] Bhutia, P. W., & Phipon, R. (2012). Application of AHP and TOPSIS method for supplier selection problem. *IOSR Journal of Engineering*, 2(10), 43-50.
[15] Kelemenis, A., & Askounis, D. (2010). A new TOPSIS-based multi-criteria approach to personnel selection. *Expert systems with applications*, 37(7), 4999-5008.
[16] Shirouyehzad, H., Baghbadorani, T. K., & Rafiee, F. M. (2015). Applied research on industrial engineering. *Journal of Applied Research on Industrial Engineering*, 2(1), 52-63.
[17] Ravasan, A. Z., Hanafizadeh, P., Olfat, L., & Taghavifard, M. T. (2017). A fuzzy TOPSIS method for selecting an e-banking outsourcing strategy. *International Journal of Enterprise Information Systems*, 13(2), 34-49.
[18] Ozdagoglu, A., & Guler, M. E. (2016). E-service quality of Internet based banking using combined fuzzy AHP and fuzzy TOPSIS. *Tehnicki vjesnik*, 23(4), 1109-1116.
[19] Celik, M., Kandakoglu, A., & Er, I. D. (2009). Structuring fuzzy integrated multi-stages evaluation model on academic personnel recruitment in MET institutions. *Expert Systems with Applications*, 36(3), 6918-6927.
[20] Jain, V., Sangaiah, A. K., Sakhuja, S., Thoduka, N., & Aggarwal, R. (2016). Supplier selection using fuzzy AHP and TOPSIS: a case study in the Indian automotive industry. *Neural Computing and Applications*, 1-10.
[21] Patil, S. K., & Kant, R. (2014). A fuzzy AHP-TOPSIS framework for ranking the solutions of Knowledge Management adoption in Supply Chain to overcome its barriers. *Expert Systems with Applications*, 41(2), 679-693.
[22] Sun, C. C. (2010). A performance evaluation model by integrating fuzzy AHP and fuzzy TOPSIS methods. *Expert systems with applications*, 37(12), 7745-7754.
[23] Kusumawardani, R. P., & Agintiara, M. (2015). Application of fuzzy AHP-TOPSIS method for decision making in human resource manager selection process. *Procedia Computer Science*, 72, 638-646.
[24] Tadic, D., Gumus, A. T., Arsovski, S., Aleksic, A., & Stefanovic, M. (2013). An evaluation of quality goals by using fuzzy AHP and fuzzy TOPSIS methodology. *Journal of Intelligent & Fuzzy Systems*, 25(3), 547-556.
[25] Zyoud, S. H., Kaufmann, L. G., Shaheen, H., Samhan, S., & Fuchs-Hanusch, D. (2016). A framework for water loss management in developing countries under fuzzy environment: Integration of Fuzzy AHP with Fuzzy TOPSIS. *Expert Systems with Applications*, 61, 86-105.
[26] Vatansever, K., & Oncel, M. (2014). Implementation of integrated multi-criteria decision making techniques for academic staff recruitment. *Journal of Management Marketing and Logistics*, 1(2), 111-126.
[27] Sarlak, M. A., Keshavarz, E., & Keshavarz, A. (2017). Evaluation and survey of knowledge management tools using fuzzy AHP and fuzzy TOPSIS techniques. *International Journal of Business Innovation and Research*, 13(3), 363-387.
[28] Asghari, M., Nassiri, P., Monazzam, M. R., Golbabaei, F., Arabalibeik, H., Shamsipour, A., & Allahverdy, A. (2017). Weighting criteria and prioritizing of heat stress indices in surface mining using a delphi technique and fuzzy AHP-TOPSIS method. *Journal of Environmental Health Science and Engineering*, 15(1), 1.
[29] Zadeh, L. A. (1965). Fuzzy sets. *Information and control*, 8(3), 338-353.
[30] Chen, S. M. (1994). Fuzzy system reliability analysis using fuzzy number arithmetic operations. *Fuzzy sets and systems*, 64(1), 31-38.
[31] Saaty, T. L. (1980). *Analytic hierarchy process*. John Wiley & Sons, Ltd.
[32] Varthanan, P. A., Murugan, N., & Kumar, G. M. (2013). An AHP based heuristic DPSO algorithm for generating multi criteria production–distribution plan. *Journal of Manufacturing Systems*, 32(4), 632-647.
[33] Kubler, S., Robert, J., Derigent, W., Voisin, A., & Le Traon, Y. (2016). A state-of the-art survey & testbed of fuzzy AHP (FAHP) applications. *Expert Systems with Applications*, 65, 398-422.
[34] Chang, D. Y. (1992). Extent analysis and synthetic decision. *Optimization techniques and applications*, 1(1), 352-355.
[35] Khazaeni, G., Khanzadi, M., & Afshar, A. (2012). Fuzzy adaptive decision making model for selection balanced risk allocation. *International Journal of Project Management*, 30(4), 511-522.
[36] Hwang, C. L., & Masud, A. S. M. (2012). *Multiple objective decision making—methods and applications: a state-of-the-art survey* (Vol. 164). Springer Science & Business Media.
[37] Nadaban, S., Dzitac, S., & Dzitac, I. (2016). Fuzzy topsis: A general view. *Procedia Computer Science*, 91, 823-831.
[38] Malik, S. K. (2016). Generalized MCDM-based decision support system for personnel prioritization. In *Proceedings of International Conference on ICT for Sustainable Development* (pp. 155-168). Springer Singapore.

[39] Soleimani, M. M., Delavar, A., Dortaj, F., Sedghpur, B. and Sanjeri, S. (2013). Selecting the managers of industry organizations, mine and trade sector by AHP Fuzzy method. *Educational Measurement*, 18(5), 21-44.

[40] Norddin, Nur Idalisa, Khalipah Ibrahim, and Ahmad Hj Aziz. "Selecting new lecturers using the Analytical Hierarchy Process (AHP)." *Statistics in Science, Business, and Engineering (ICSSBE), 2012 International Conference on*. IEEE, 2012.

[41] Shaker Ardakani, M., Ketabi, S., & Mohammad Shafeai, M. (2012). Ranking personnel and selecting supervisors by a hybrid method of fuzzy AHP and Fuzzy TOPSIS. *Production and Operations Management*, 2, 1-22.